1 |

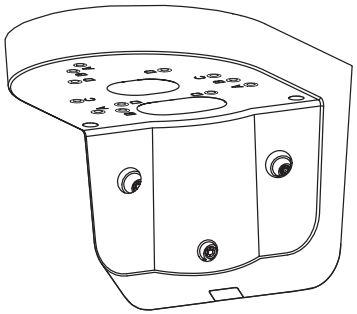

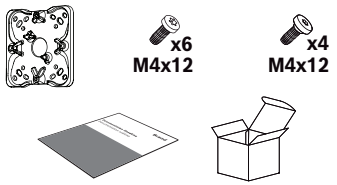

2 |

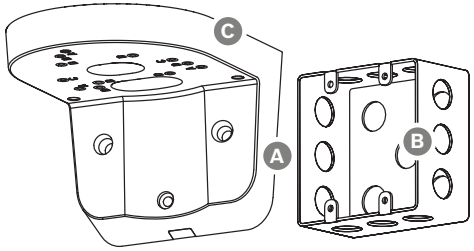

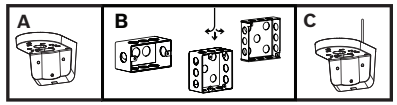

3 |

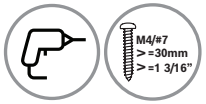

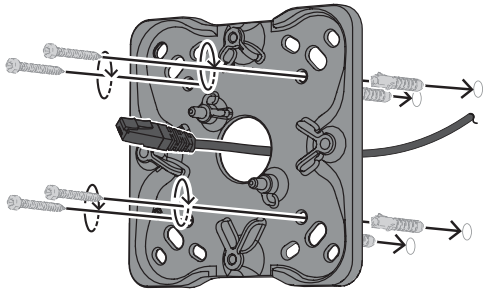

4 |



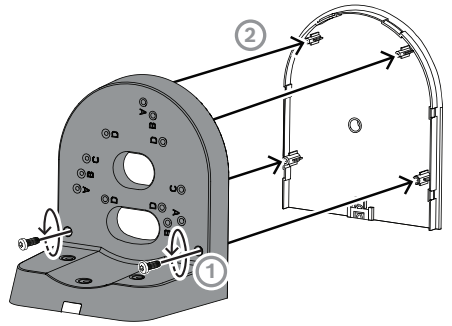

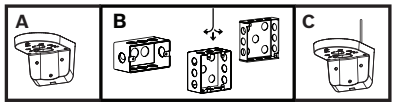

5 |

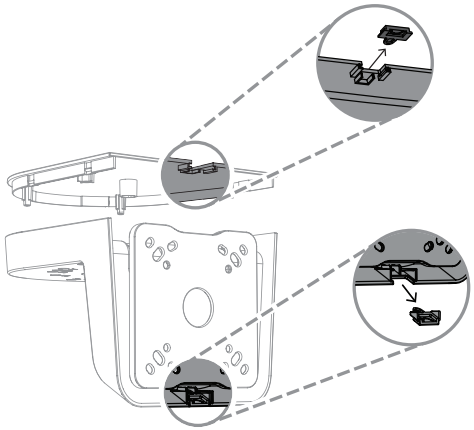

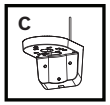

6 |

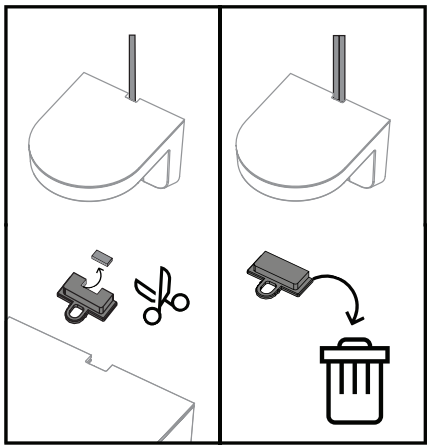

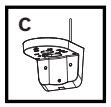

7 |



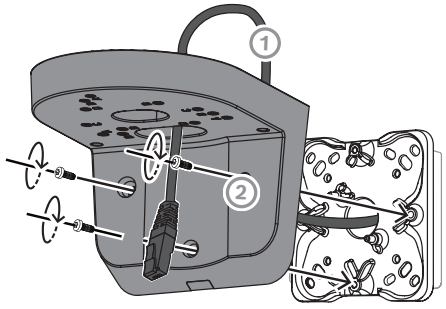

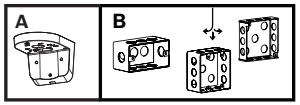

i
NDI-370x-Ax
NDE-370x-Ax
NUV-370x-F0x
NUE-370x-F0x

NDV-570x-Ax
NDE-570x-Ax

8 |



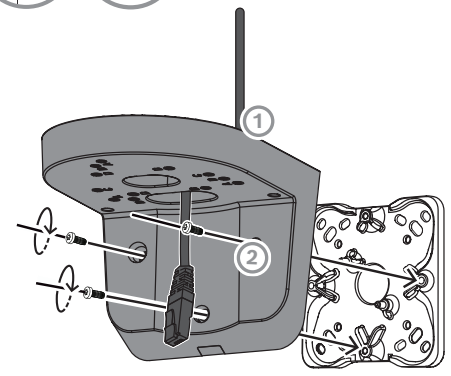

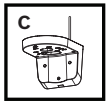

i
NDV-570x-Ax
NDE-570x-Ax

NDI-370x-Ax
NDE-370x-Ax
NUV-370x-F0x
NUE-370x-F0x

9 |

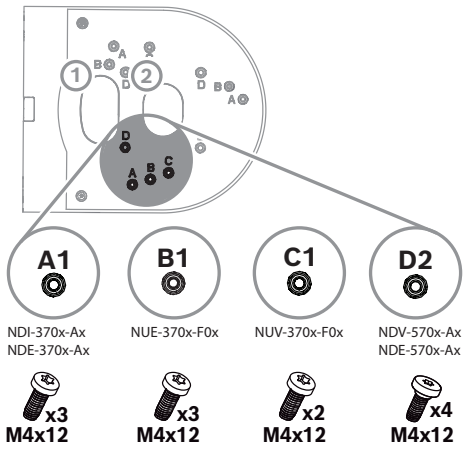

10 |

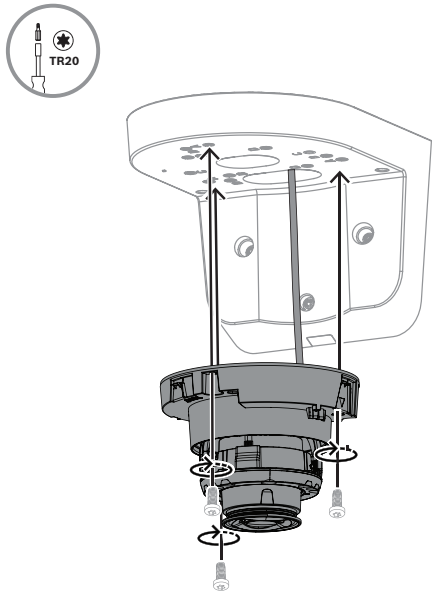

11 |

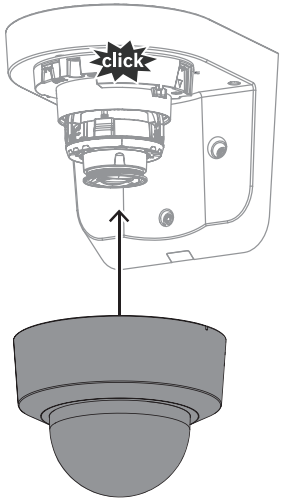

12 |

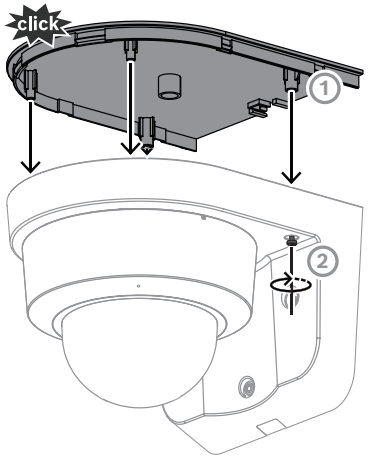

13 |

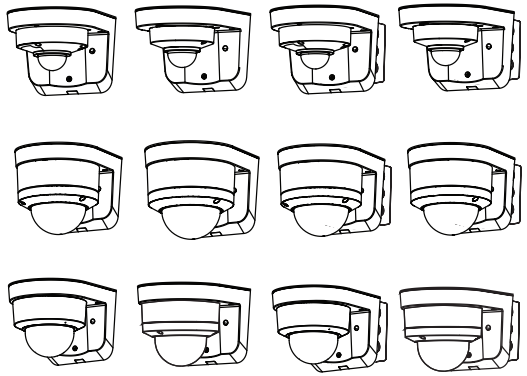

Compact wall mount, 110, 123, 137, 148mm

NDA-3083-LWMT

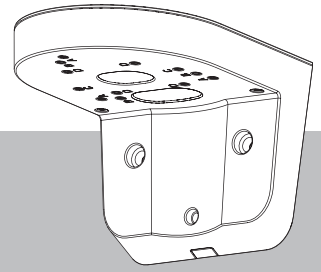

en Quick installation guide

IQSIGHT B.V.
Achtseweg Zuid 173
5651 GW Eindhoven
The Netherlands
www.iqsight.com
© IQSIGHT 2026

2026-05 | 04 | F.01U.408.514 | 202605281513